B-COMMAND®

ACCEPT ENABLING SWITCHES

Product overview

Enabling Switches Panel Mounted - Accept A

ZA1
Enabling Switches
Small configuration, side and top mounting type

page 5

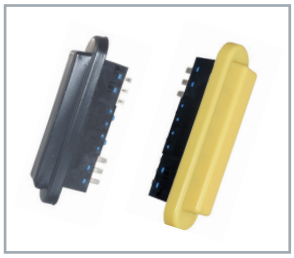

ZA2
Redundant Enabling Switches with and without rubber cap, optional auxiliary contacts

page 6 - 7

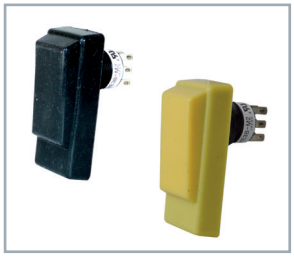

ZA3
Redundant Enabling Switches with or without rectangular rubber cap, Ø 16mm mounting diameter

page 8 - 9

ZA5
Redundant Enabling Switches with or without round rubber cap, Ø 16mm mounting diameter

page 8 - 9

ZA6
Redundant Enabling Switches with or without rubber cap

page 10 - 11

Enabling Switches Grip Type – Accept B

ZB1
Redundant Enabling Switches, with hand grip, optional Emergency-Stop-Button

page 12 - 13

ZB2
Redundant Enabling Switches, with hand grip, Emergency-Stop-Button and 2 buttons optional

page 14 - 15

B-COMMAND – Quality and Reliability

Why 3-position enabling switches are so important

If personal protection in the area of human-machine interaction is necessary, there is a distinction between normal and specific operations. Normal operation for robots, stands for automatic functions in which the operational protection mechanisms are active.

The specific operation covers the installation, programming, troubleshooting and maintenance. During this work, the effect of the normal protection scheme must be repealed. To ensure personal security in this mode, additional measures must be taken. These include the usage of enabling switches.

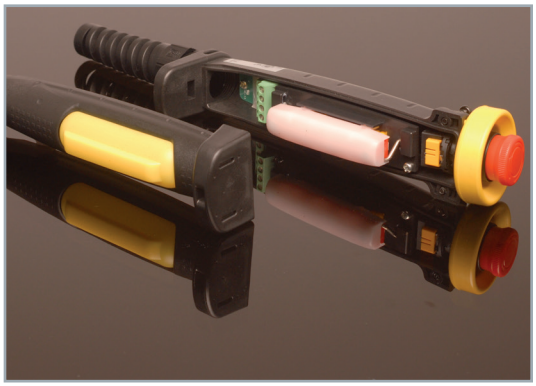

According to international standards, an enabling switch must be provided with 3 positions (OFF-ON-OFF). From an ergonomic point of view an operator in a shock situation either releases the switch or he pushes it firmly. If the switch is released, all versions of B-COMMAND enabling switches will shut down the machine. If the switch is pressed through, only the 3-position switch ensures a shutdown and avoids the risk of an injury. Another security requirement for an enabling switch is avoiding to turn ON while being released from position 3 (OFF) to position 1 (OFF) (IEC60204-1, 9.2.5.8).

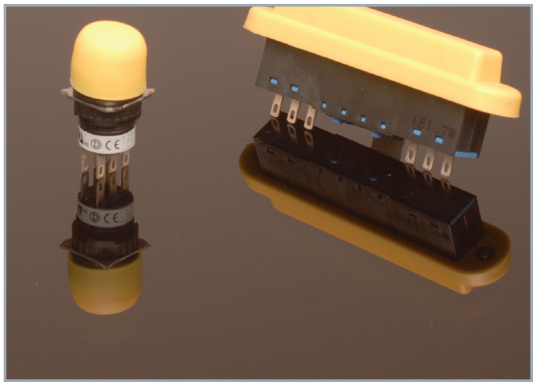

The enabling switches of B-COMMAND are characterized by the following advantages:

- Ideal ergonomics
- Light weight
- Stable pressure point
- 2 power circuits (redundancy)
- Auxiliary contacts for monitor functions
- Tamper-proof

TECHNOLOGY

Mechanics of 3-Position Switches

By using an enabling switch the operator is able to prevent damage to people and equipment, in the case of an unpredictable behaving machine.

Panicking people normally respond either by pressing firmly or by releasing the button: Both ways shutdown the machine reliably.

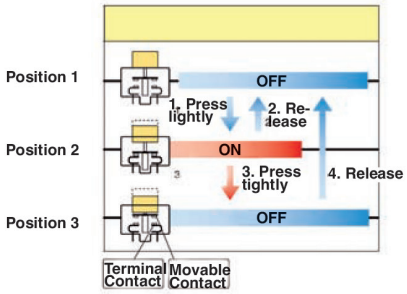

PRODUCTS

Highest Production Excellence and Reliability

The enabling switches have redundant switching contacts and redundant actuators. With a suitable circuit the deviation of the switching states of both contacts can be detected as an error and the machine can be decommissioned, in spite of possibly damaged contacts.

For an optimal ease of use the actuating force from position 2 to 3 for the centric and the eccentric pressure is absolutely identical: Even switching with only one finger on the outer end is easily possible. Even after the 10,000 activations the necessary workforce only changes marginal.

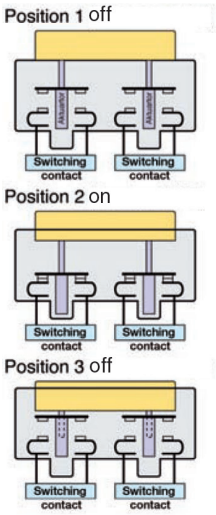

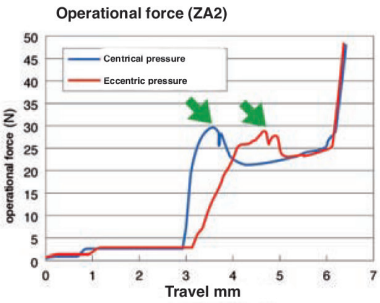

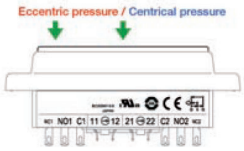

STANDARDS

Icon	Standard	Description
ISO	ISO 12100-1 (2003) Reliability of machinery - basic principles, general arrangement guidelines – Part 1: Basic terminology and methodology	3.26.2 permission-switch unit
	ISO 12100-2 (2003) Safety of machinery - Basic concepts, general principles for design, Part 2: Technical principles and specifications	4.11.9 operating mode adjustment, educate, modification and maint. cleaning, troubleshooting
	ISO 10218-1 (2006) industrial robot – safety requirement - Part 1: Robot	5.8.3 permission-switch unit
IEC	IEC 60204-1 (2005) machine safety – Electrical equipment of machines Part 1: General requirements	10.9 permission-switch unit
	IEC 60947-5-8 (2006) Low-voltage – switchgear- Part 5-8: control unit and switching elements- 3-position enabling switch	3-position enabling switch
ANSI	ANSI/RIA/ISO 10218-1 (2007) industrial robot – safety requirement – Part 1: robot	5.8.3 permission-switch unit
	ANSI/RIA R15.06 (1999) Industrial robot & robot requirement – safety requirement	4.7.3 permission-switch unit
	ANSI B11.19 (2003) performance conditions for protection device	12.3 permission-switch unit
	NFPA79 (2007) electrical standard for industrial machines	9.2.5.7 permission-switch unit
	CAN/CSA Z434-03 (2003) industrial robot and robot system – general safety requirement	4.7.4 permission-switch unit
semi	SEMI S2-0706 (2006) Environment-, health-, and security policy in semiconductor production	20.4 industrial robot and industrial robot systems
UL	UL 1740 (1998) Robot and robot equipment	41.5 operator terminal
JIS	JIS B 9700-1 (2004) Reliability of machinery - basic principles, general arrangement guidelines Part1: Basic terminology and methodology	3.26.2 permission-switch unit
	JIS B 9700-2 (2004) Reliability of machinery - basic principles, general arrangement guidelines Part 2: Technical principles and specifications	4.11.9 operating mode adjustment, educate, modification, troubleshooting, cleaning and maintenance
	JIS B 9960-1 (1999) machine safety – electrical equipment of machinery	9.2.5.8 permission-switch unit

IEC 60947-5-8 already published

Although international rules require the use of 3-Position enabling switches, nothing was determined regarding the operating force and the lifetime of a switch. Both are of crucial, ergonomic importance.

All enabling switches of B-COMMAND were designed and tested with special attention to long life and maximum safety. The special requirements of IEC 60947-5-8 constituted the basis of the product.

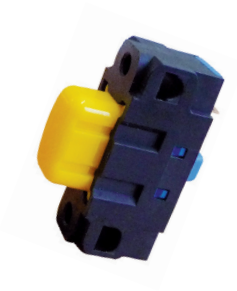

Enabling Switch ZA1

- 3 positions (OFF - ON - OFF)
- Ideal as enabling switch on input devices
- 1 main contact (NO)
- Small size
- Positive opening (Level 2 - Level 3)
- The switch does not turn ON while being released from position 3 (OFF when pressed) to position 1 (OFF when released)

General Data

Instructions and approvals	IEC 60947-5-1, EN 60947-5-1 (DEMKO approval) UL508 (UL recognized), CSA C22.2, No. 14 (c-UL recognized), JIS C8201-5-1 ISO 12100 / EN 292, IEC 60204-1 / EN 60204-1 ISO 11161 / prEN 11161, ISO 10218 / EN 775, ANSI/RIA R15.06, ANSI B11.191
• Operating temperature	-20 to +60 °C (no freezing)
• Storage temperature	-40 to +80 °C (no freezing)
• Relative humidity	45 to 85% (no condensation)
• Pollution degree	2 (IEC947-1)
• Contact resistance	50 mΩ (initial value)
• Insulation resistance	100 MΩ min. (Megger DC 500 V)
• Dielectric strength	2,5 kV
• Operating frequency	1.200 operations per hour
• Mechanical lifetime	Position 1—2—1: 10^6 operations min. Position 1—2—3—1: 10^5 operations min.
• Electrical lifetime	10^5 operations minimum
• Shock resistance	Operation: 150 m/s² Destrucion: 1.000 m/s²
• Vibration resistance	Operation: 5 to 55 Hz, amplitude 0,5 mm min. Destruction: 16,7 Hz, amplitude 1,5 mm min.
• Terminal style	Solder terminal
• Applicable wire	0,5 mm² max. / cable
• Solder terminal heat resistance	310 to 350°C, 3 seconds max.
• Terminal tensile strength	20 N minimum
• Mounting screw recommended tightening torque	M3 / 0,5 to 0,8 Nm
• Degree of protection	IP40 (IEC 60529)
• Conditional short-circuit current	50 A (250 V)
• Rec. short circuit fuse	250 V, 10 A fast acting type fuse for short-circuit protection (IEC 60127-1)
• Weight	approx. 6 g
• Direct opening force	30 N min. (position 2 — 3)
• Operator strength	250 N min.

Electrical Specification

• Rated voltage	250 V AC / DC		
• Operating current	5,0 A		
• Rated data	30 V	125 V	250 V
• Resistive load (AC 12)	—	3,0 A	1,5 A
• Inductive load (AC 15)	—	1,5 A	0,75 A
• Resistive load (DC 12)	2,0 A	0,4 A	0,2 A
• Inductive load (DC 13)	1,0 A	0,22 A	0,1 A
• Contact configuration	1NO contact		

Min. load: 3 V AC / DC und 5 mA (reference value).

Operation Character

Step	1		2		3
• Actuator travel (mm)	0,0	1,4	2,2	2,7	5,0
• Operating force (N)	0,0	2,3	3,0	15	3,0
• Work contact					

open closed positive opening operation

Ordering Information

Picture	Mounting type	Type no.
	Side	ZA1K0-01
	Front	ZA1K0-02

Dimensions (all dimensions in mm)

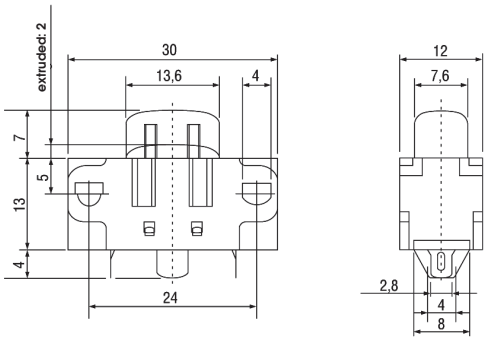

ZA1K0-01 (side mounting type)

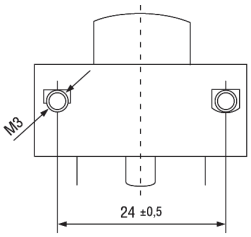

ZA1K0-02 (top mounting type)

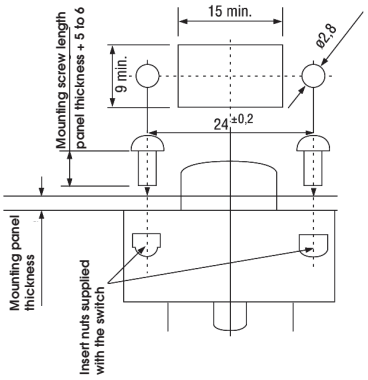

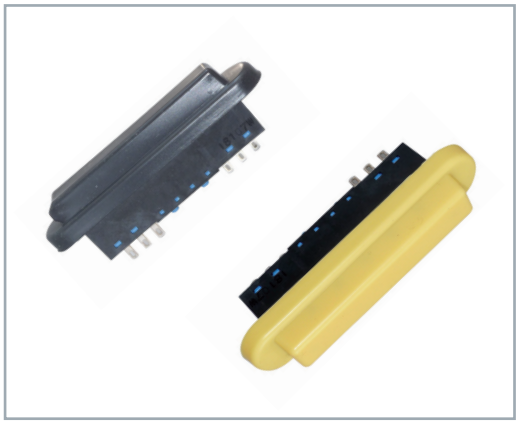

Enabling Switch ZA2

- 3 positions (OFF - ON - OFF)
- Ideal as enabling switch on input devices
- 2 contacts (changeover)
- Positive opening of the auxiliary contacts (Level 2 - Level 3)
- The switch does not turn ON while being released from position 3 (OFF when pressed) to position 1 (OFF when released)
- Redundant contact configuration fulfils safety category 4
- Auxiliary contacts for monitor functions
- With rubber cap IP65

General Data

Instructions and approvals	IEC 60947-5-1, EN60947-5-1 (DEMKO approval), UL508 (UL recognized)
	CSA C22.2, No. 14 (c-UL recognized), JIS C8201-5-1, ISO 12100 / EN 292, IEC 60204-1 / EN 60204-1, ISO11161 / prEN 11161, ISO10218 / EN 775, ANSI / RIA R15.06, ANSI B11.19
• Operating temperature	-25 to +60 °C (no freezing)
• Storage temperature	-40 to +80 °C (no freezing)
• Relative humidity	45 to 85% RH (no condensation)
• Pollution humidity	2 (inside panel, operator side) 3 (outside panel, operator side)
• Contact resistance	50 mΩ maximum (initial value)
• Insulation resistance	100 MΩ minimum (500 V DC megger)
• Dielectric strength	2,5 kV
• Operating frequency	1.200 operations per hour
• Mechanical lifetime	Position 1—2—1: 10^6 operations min. Position 1—2—3—1: 10^5 operations min.
• Electrical lifetime	10^5 operations minimum
• Shock resistance	Operation: 150 m/s^2 Destruction: 1.000 m/s^2
• Vibration resistance	Operation: 5 to 55 Hz, amplitude 0,5 mm min. Destruction: 16,7 Hz, amplitude 1,5 mm min.
• Terminal style	Solder terminal
• Applicable wire	0,5 mm^2 maximum / cable
• Solder terminal heat resistance	310 to 350°C, 3 seconds maximum
• Terminal tensile strength	20 N minimum
• Mounting screw recommended	M3 / 0,5 to 0,8 Nm
• Degree of protection (with)	IP40 (without rubber cap) / IP65
• Conditional short-circuit current	50 A (250 V)
• Rec. short circuit fuse	Use 250 V/10 A fast acting (IEC 60127-1)
• Weight	26 g (without rubber cap) 30g (with rubber cap)
• Direct opening force	60 N min.
• Operator strength	500 N min.

Electrical Specification

• Rated voltage	250 V AC / DC		
• Operating current	3,0 A		
• Rated data	30 V	125 V	250 V
Working contacts			
• Resistive load (AC 12)	—	1,0 A	0,5 A
• Inductive load (AC 15)	—	0,7 A	0,5 A
• Resistive load (DC 12)	1,0 A	0,2 A	—
• Inductive load (DC 13)	0,7 A	0,1 A	—
• Contact configuration	2 changeover contacts		
Auxiliary contacts			
• Resistive load (AC 12)	—	2,0 A	1,0 A
• Inductive load (AC 15)	—	1,0 A	0,5 A
• Resistive load (DC 12)	2,0 A	0,4 A	0,2 A
• Inductive load (DC 13)	1,0 A	0,22 A	0,1 A
• Contact configuration	0-4 NC contacts		

Min. load: 3 V AC / DC and 5 mA (reference value).

Operating characteristics

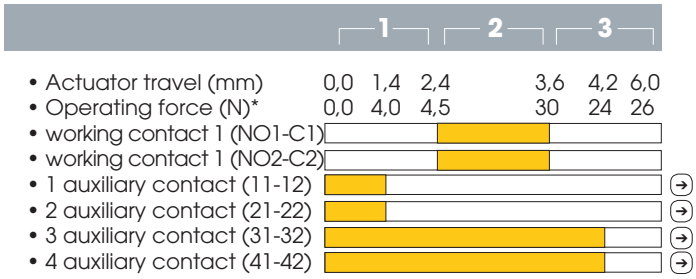

open closed positive opening operation

*Please note: The operating forces gives a refer to a switch without a rubber cap.

Ordering Data

Image	Operating Contacts	Auxiliary Contacts „Actuator not operated“*	Auxiliary Contacts „Actuator operated“*	Serial Number
with rubber cap 	2	0	0	ZA2**0-01
	2	1	1	ZA2**2-01
	2	2	2	ZA2**4-01
without rubber cap 	2	0	0	ZA2K0-01
	2	1	1	ZA2K2-01
	2	2	2	ZA2K4-01
rubber cap 	Rubber cap ZA2, black			ZA2-01
	Rubber cap ZA2, black, silicone free			ZA2-02
	Rubber cap ZA2, grey, silicone free			ZA2-03
	Rubber cap ZA2, yellow			ZA2-04
	Rubber cap ZA2, yellow, silicone free			ZA2-05

Please note:
* ,,Actuator not operated” and ,,Actuator operated” describe auxiliary contacts, by which the switching status can be signalised.
** Insert letter Y: yellow or S: black for the desired colour.

Terminal Arrangement

Buttom View

ZA2K0-01

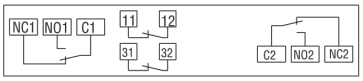

ZA2K2-01

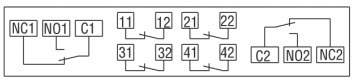

ZA2K4-01

1. NO1-C1, NO2-C2: Connections of operating contact
2. 11-12, 21-22: Connections of auxiliary contacts „Actuator operated“
3. 31-32, 41-42: Connections fo auxiliary contacts „Actuator operated“

Ordering Information

Z A2 _____ _____ -01

Rubber cap
K = no rubber cap
Y = yellow
S = black
G = grey, silicone-free
SF = black, silicone-free
YF = yellow, silicone-free

Auxiliary Contacs
0 = without
2 = 2 Auxiliary contact
4 = 4 Auxiliary contact

Dimensions (all dimensions in mm)

Without rubber cap

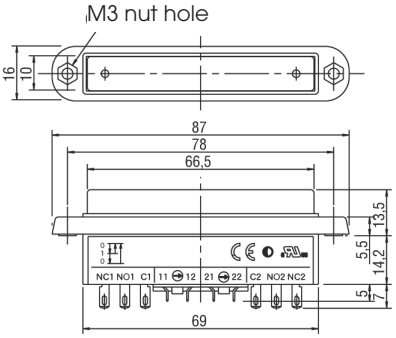

With rubber cap

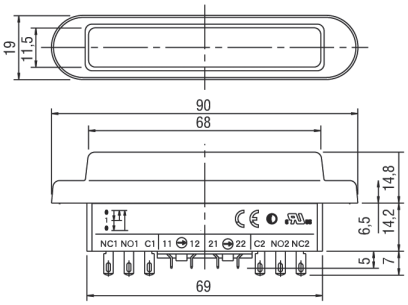

Mounting hole layout

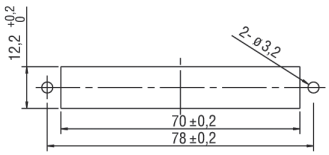

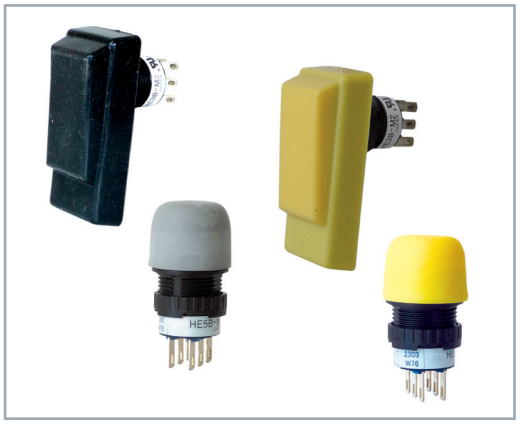

Enabling Switch ZA3 / ZA5

- Dimension Ø 16 mm
- 3 positions (OFF - ON - OFF)
- Ideal as enabling switch on input devices
- 2 contacts (changeover)
- The switch does not turn ON while being released from position 3 (OFF when pressed) to position 1 (OFF when released)
- Redundant contact configuration fulfils safety category 4
- With rubber cap IP65

General Data

Instructions and approvals	ISO12100, ISO11161, ISO10218, IEC60204-1, IEC60947-5-1, EN292, EN775, prEN11161, UL508, CSA C22.2 Nr. 14, JIS C8201-5-1, ANSI/RIA R15.06
• Operating temperature	Silicone: -25°C to +60°C (no freezing) PVC: -10°C to +60°C (no freezing)
• Storage temperature	-40°C to +80°C (no freezing)
• Relative humidity	45 to 85% (no condensation)
• Pollution degree	3
• Contact resistance	50 mΩ (initial value)
• Insulation resistance	100 MΩ min. (500 V DC megger)
• Dielectric strength	1,5 kV
• Switching frequency	1.200 operations/hour
• Mechanical lifetime	Position 1—2—1: 10^6 operations min. Position 1—2—3—1: 10^5 op. min.
• Electrical durability	10^5 operations (full load)
• Shock resistance Operation:	150 m/s²
Destruction:	500 m/s²
• Vibration resistance Operation:	5 to 55 Hz, amplitude 0,5 mm min.
Destruction:	16,7 Hz, amplitude 1,5 mm min.
• Terminal style	Solder terminal
• Applicable wire	0,5 mm² maximum / cable
• Solder terminal heat resistance	310°C to 350°C, 3 seconds max.
• Tensile strength of terminal	20 N min.
• Locking ring recommended tightening torque	0,68 to 0,88 Nm
• Protection degree	with rubber cap: IP65 without rubber cap: IP40 (IEC 60529)
• Conditional short-circuit current	50 A (250 V)
• Rec. shorting fuse	250 V, 10 A flink (IEC 60127-1)
• Weight	ZA3 with rubber cap: approx. 18 g ZA3 without rubber cap: approx. 14 g ZA5 with rubber cap: approx. 9 g ZA5 without rubber cap: approx. 7 g
• Max. perm. operating force	500 N min.

The pressure point shown on the right applies for the operational characteristics of the ZA3

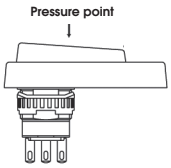

Electrical Specifications

• Rated voltage	125 V AC / DC			
• Operating current	3,0 A			
	ZA3		ZA5	
• Rated data	30 V	125 V	30 V	125 V
• Resistive load (AC 12)	—	1,0 A	—	0,5 A
• Inductive load (AC 15)	—	0,7 A	—	0,3 A
• Resistive load (DC 12)	1,0 A	0,2 A	1,0 A	—
• Inductive load (DC 13)	0,7 A	0,1 A	0,7 A	—
• Contact configuration	2 changeover contacts			

Min. load: 3 V AC / DC and 5 mA (reference value).

Operating Characteristics

		1		2		3
• Actuator travel (mm)	ZA3	0,0	0,8	1,8	1,7	1,9
	ZA5	0,0	2,3	3,0	3,6	5,0
• Operating force (N)*	ZA3	0,0	3,0		20	
	ZA5	0,0	3,			2
• Contact 1 (NO1-C1)						
• Contact 1 (NO2-C2)						

open closed

Ordering Information

Z A3 ____ -01

Rubber cap
K0 = Without
Y0 = Yellow
G0 = Grey, silicone-free
S0 = Black

Z A5 ____ -01

Rubber cap
K0 = Without
Y0 = Yellow
G0 = Grey, silicone-free
S0 = Black

02 = incl. handle

Ordering Information

Picture	Description	Serial Number
	Screwing tool	ZA5-06
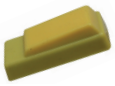	Rubber cap ZA3, black	ZA3-01
	Rubber cap ZA3, black, silicone free	ZA3-02
	Rubber cap ZA3, yellow	ZA3-03
	Rubber cap ZA3, yellow, silicone free	ZA3-04
	Rubber cap ZA3, grey, silicone free	ZA3-05
	Rubber cap ZA5, black	ZA5-01
	Rubber cap ZA5, grey, silicone free	ZA5-02
	Rubber cap ZA5, yellow	ZA5-03
	Handle for installing a ZA5	ZA5-05

*Please note: Colour of the rubber cap:
Y: Yellow, S: Black

Wiring Diagram

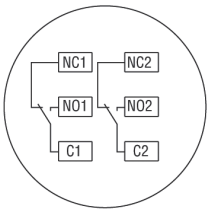

1. NO1-C1, NO2-C2: Connections of the working contacts

Mounting Instructions

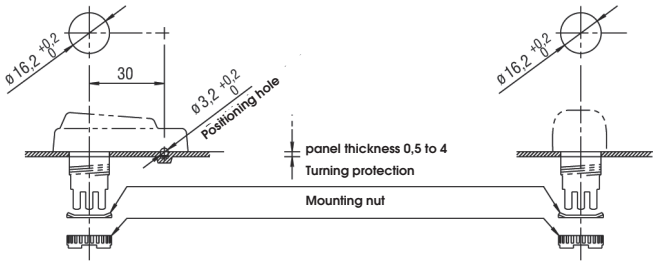

1. Recommended tightening torque for locking ring ZA3: 0,68 - 0,88 Nm, ZA5: 0,29 - 0,49 Nm.
3. Remove the protection of the rubber cap when no positioning hole is available. (To maintain the degree of protection (IP65) do not damage the rubber cap.)

Dimensions (all dimensions in mm)

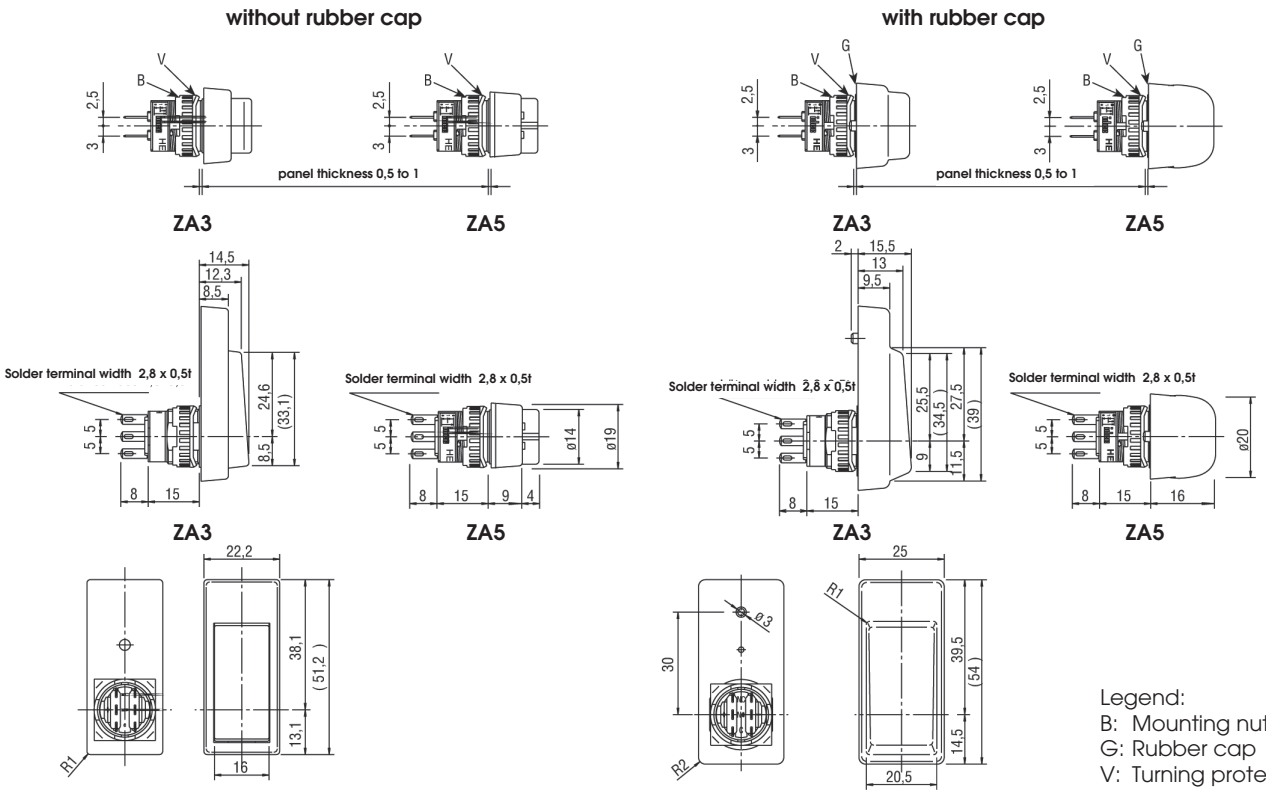

Legend:
B: Mounting nut
G: Rubber cap
V: Turning protection

Enabling Switch ZA6

- 3 positions (OFF - ON - OFF)
- Ergonomic design
- 2 contacts
- The switch does not turn ON while being released from position 3 (OFF when pressed) to position 1 (OFF when released)
- Redundant contact configuration fulfils safety category 4
- Degree of protection IP65

General Data

Instructions and approvals	IEC 60947-5-1/EN60947-5-1 IEC 60947-5-8/EN60947-5-8 (TÜV approved) UL508 (UL recognized) CSA C22.2 No.14 (c-UL recognized) ISO 12100/EN ISO 12100, IEC 60204-1/EN 60204-1, ISO 11161/EN ISO 11161, ISO 10218-1/EN ISO 10218-1, ANSI/RIA/ISO 10218-1, ANSI/RIA/R15.06, ANSI B 11.19 ISO 13849-1/EN ISO 13849-1
• Operating temperature	-25°C to +60°C (no freezing)
• Storage temperature	-40°C to +80°C (no freezing)
• Relative humidity	45 to 85% (no condensation)
• Pollution degree	2 (inside panel, terminal side) 3 (outside panel, operator side)
• Contact resistance	50 mΩ maximum (initial value)
• Insulation resistance	100 MΩ min. (Megger DC 500 V)
• Dielectric Strength	1,5 kV (3 position switch) 2,5 kV (monitor switch)
• Operating frequency	1.200 operations/hour
• Mechanical lifetime	position 1—2—1: 10^6 operations min. pos. 1—2—3—1: 10^5 operations min.
• Electrical lifetime	10^5 operations minimum
• Shock resistance Operation	150 m/s²
Destruction	500 m/s²
• Vibration resistance Operation	5 to 55 Hz, Amplitude 0,5 mm min.
Destruction	16,7 Hz, Amplitude 1,5 mm min.
• Terminal style	solder terminal
• Terminal screw tightening torque	0,5 mm² max.
• Solder terminal heat resistance	310°C to 350°C, 3 sec. max.
• Terminal tensile strength	20 N min.
• Mounting screw tightening torque	M3 / 0,5 to 0,8 Nm
• Protection degree	IP 65
• Conditional short-circuit current	50 A (250 V) 50 A (125 V) working contacts 50A (250 V) auxiliary contacts
• Rec. short circuit protection	250 V, 10 A flink (IEC 60127-1)
• Weight	17g
• Terminal tensile strength	250 N min.

Electrical Specifications

• Rated voltage	250 V AC / DC		
• Operating current	5,0 A		
• Rated data	30 V	125 V	250 V
Working contacts			
• Resistive load (AC 12)	—	0,5 A	—
• Inductive load (AC 15)	—	0,3 A	—
• Resistive load (DC 12)	1,0 A	—	—
• Inductive load (DC 13)	0,7 A	—	—
• Contact Configuration	2 NO contacts		
Auxiliary contacts			
• Resistive load (AC 12)	—	2,0 A	1,0 A
• Inductive load (AC 15)	—	1,0 A	0,5 A
• Resistive load (DC 12)	2,0 A	0,4 A	0,2 A
• Inductive load (DC 13)	1,0 A	0,22 A	0,1 A
• Contact Configuration	0-2 NC contacts		

Min. Load: 3 V AC / DC and 5 mA (guidance value)

Operating Characteristics

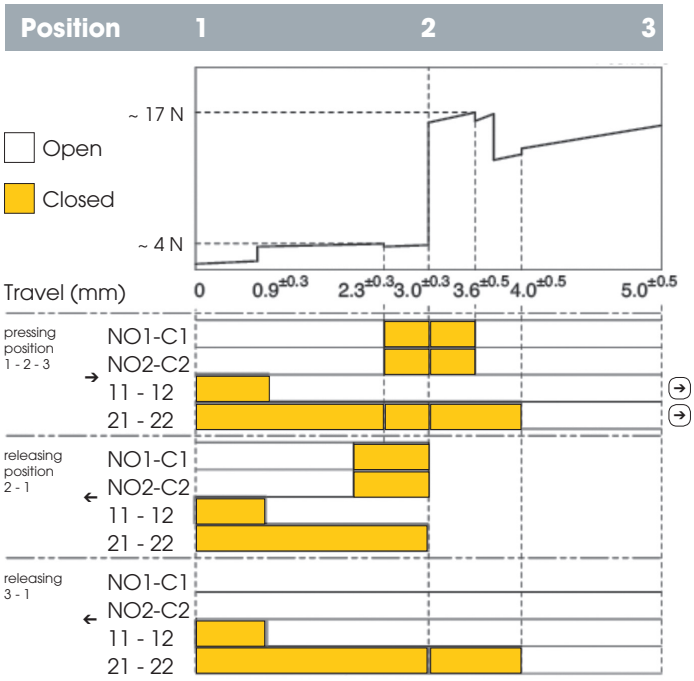

- When a rubber cap is used, the operating force depends on the operating temperature.
- The operating force to move the button from position 2 to position 3 can be changed.

Ordering Information

Image	Contacts	Auxiliary contacts „Actuator not operated"*	Auxiliary contacts „Actuator operated"*	Serial Number
Black rubber cap 	2	0	0	ZA6S0-01
	2	1	1	ZA6S2-01
yellow rubber cap 				
	2	0	0	ZA6Y0-01
	2	1	1	ZA6Y2-01
Rubber cap 				
	Rubber cap ZA6, black			ZA6-01
	Rubber cap ZA6, yellow			ZA6-02

Please note:
* „Actuator not operated" and „Actuator operated" describe auxiliary contacts by which the switching status can be signalised.

Wiring Diagram

ZA6...61-01

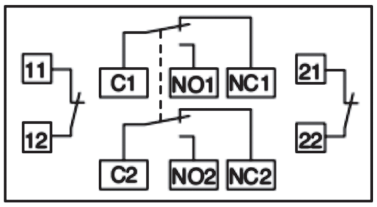

Ordering Information

Z A6 ____ __ -01

Rubber cap
Y = yellow
S = black

Auxiliary Contacts
0 = without
2 = 2 Auxiliary Contacts

Dimensions (all dimensions are in mm)

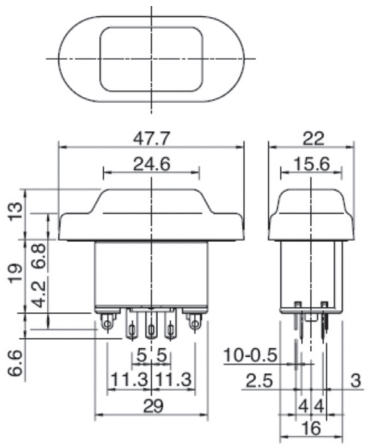

Mounting hole Layout

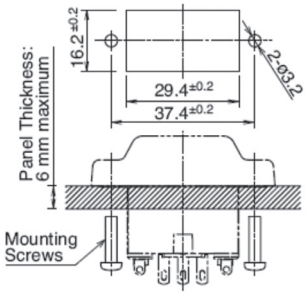

- Mounting screws: M3 screw × 2 (not attached and must be supplied by the user)
- Mounting screw length: 5 to 6 mm (panel thickness + gasket)

Enabling Switch ZB1

- 3 positions (OFF - ON - OFF)
- Ideal as an enabling switch in a special operation area
- 2 contacts (NO)
- Positive opening (Level 2 - Level 3)
- The switch does not turn ON while being released from position 3 (OFF when pressed) to position 1 (OFF when released)
- Redundant contact configuration fulfils safety category 4
- 1 auxiliary contact (NC)
- Emergency-Stop Button optional
- Degree of protection IP66
- Particularly suitable for robot applications (ANSI Robotic Standards)

General Data

Instructions and approvals	ISO12100, ISO11161, ISO10218, IEC60947-5-1, IEC60204-1, EN292, EN775, EN60204-1, prEN11161, EN60947-5-1, UL508, CSA C22.2 Nr. 14, JIS C8201-5-1, ANSI/RIA R15.06
• Operating temperature	-25°C to +60°C (no freezing)
• Storage temperature	-40°C to +80°C (no freezing)
• Relative humidity	45 to 85% (no condensation)
• Pollution degree	3
• Contact resistance	100 mΩ (initial value)
• Insulation resistance	100 MΩ min. (Megger DC 500 V)
• Dielectric strength	2,5 kV
• Operating frequency	1.200 operations / hour
• Mechanical lifetime	pos. 1—2—1: 10^6 operations min. pos. 1—2—3—1: 10^5 oper. min.
• Electrical lifetime	10^5 operations
• Shock resistance Operation	150 m/s²
Destruction	1.000 m/s²
• Vibration resistance Operation	5 bis 55 Hz, Amplitude 0,5 mm min.
Destruction	16,7 Hz, Amplitude 1,5 mm min.
• Connection type	Screw terminal
• Applicable wire	0,14 to 1,5 mm²
• Cable outside diameter	7 to 13 mm
• Conduit size	M 20
• Terminal tensile strength	20 N min.
• Locking ring recommanded tightening torque	0,5 to 0,6 N / m
• Degree of protection	ZB1Y0-01= IP66 ZB1Y0-02= IP65
• Conditional Short-circuit current	50 A (250 V)
• Rec. short circuit protection	250 V, 10 A fast acting type fuse (IEC 60127-1)
• Weight	ZB1Y0-02 approx. 250 g. ZB1Y1-01 approx. 210 g.

GS-ET-22

Electrical Specifications

• Rated voltage	250 V AC / DC		
• Operating current	3,0 A		
• Rated data	30 V	125 V	250 V
Working contacts			
• Resistive load (AC 12)	—	3,0 A	1,5 A
• Inductive load (AC 15)	—	1,5 A	0,75 A
• Resistive load (DC 12)	2,0 A	0,4 A	0,2 A
• Inductive load (DC 13)	1,0 A	0,22 A	0,1 A
• Contact Configuration	2 NO contacts		
Auxiliary contacts			
• Resistive load (AC 12)	—	2,0 A	1,0 A
• Inductive load (AC 15)	—	1,0 A	0,5 A
• Resistive load (DC 12)	2,0 A	0,4 A	0,2 A
• IInductive load (DC 13)	1,0 A	0,22 A	0,1 A
• Contact Configuration	1 NC contact		
Emergency-Stop Button			
• Resistive load (AC 12)	—	—	—
• Inductive load (AC 15)	—	—	0,5 A
• Resistive load (DC 12)	—	—	—
• Inductive load (DC 13)	—	—	0,1 A
• Contact Configuration	2 NC contacts		

Min. Load: 3 V AC / DC and 5 mA (guidance value)

Operating Characteristics

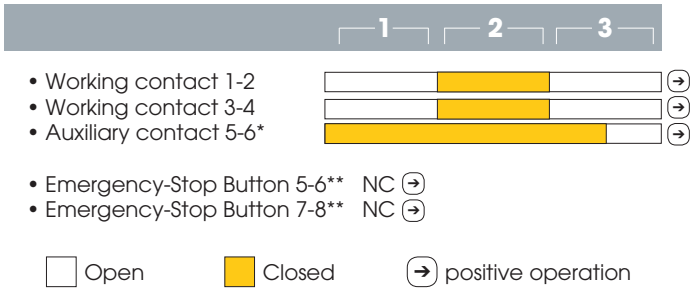

Note:
* Applies only for ZB1Y1-01
** Applies only for ZB1Y0-02

Ordering Information

Image	Description	Serial Number
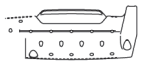	2 contacts, 1 auxiliary contact (NC), push button; grey, silicone free rubber cap	ZB1G1-01
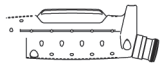	2 contacts, push button; yellow rubber cap	ZB1Y0-01
	2 contacts, 1 auxiliary contact (NC); yellow rubber cap	ZB1Y1-01
	2 contacts, 1 auxiliary contact (NC), push button; yellow rubber cap	ZB1Y1-02
	2 contacts, 1 Emergency-Stop Button (2NC); yellow rubber cap	ZB1Y0-02
	Rubber cap, yellow	ZB1-01
	Rubber cap silicone-free, grey	ZB1-02
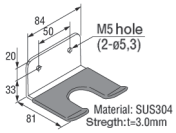	Mounting brackets, metal	ZB1-03

Wire Length	Terminal No. 1-4	Terminal No. 5-8
• L1, L2 (mm)	L1= 40 mm	L2= 27 mm
• L3 (mm)	L3= 6 mm	

Mounting Instructions

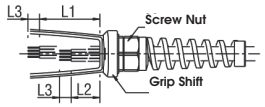

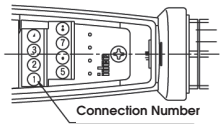

Element	Description	Torque
• A	Housing Screws	1,2 ±0,1 Nm
• B	Rubber Cap Screws	—
• C	Cable Gland	4,0 ±0,3 Nm
• D	Cable Relief	4,0 ±0,3 Nm
• E	Screw Terminal	0,5-0,6 ±0,2 Nm
• F	Circuit Board Screw	—

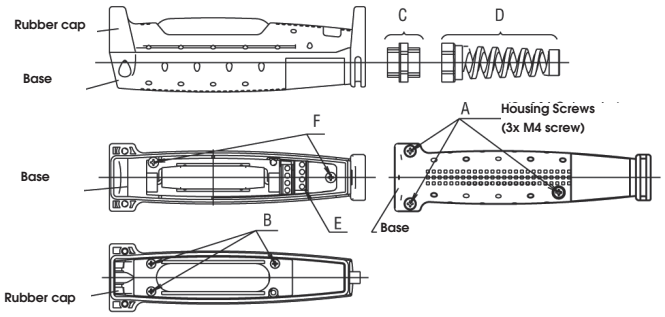

Dimensions (all dimensions in mm)

ZB1Y1-01

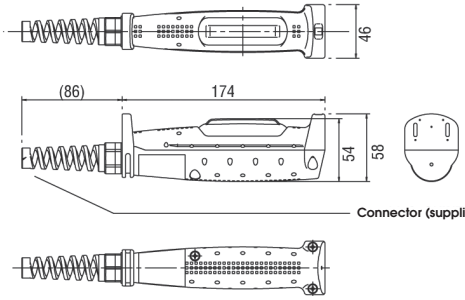

ZB1Y0-02

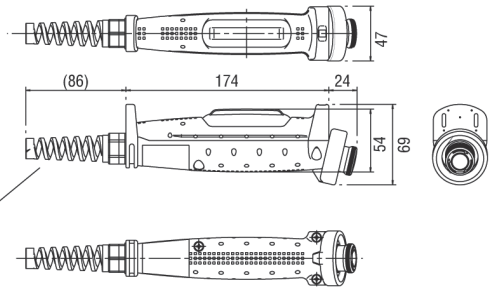

Connector (supplied with grip switch)

Enabling Switch ZB2

- 3 positions (OFF - ON - OFF)
- Ergonomic design
- 2 contacts
- The switch does not turn ON while being released from position 3 (OFF when pressed) to position 1 (OFF when released)
- Redundant contact configuration fulfils safety category 4
- Degree of Protection up to IP67
- Optional indicator light
- Optional button or key switch
- Optional Emergency-Stop Button
- Solder terminals

General Data

Instructions and approvals	IEC60947-5-1, EN60947-5-1, JIS C8201-5-1, GS-ET-22, UL508, CSA C22.2 Nr. 14,
• Application standards for use:	ISO12100/EN ISO12100, IEC60204-1/EN60204-1, ISO11161/EN ISO11161, ISO10218-1/EN ISO10218-1, ANSI/RIA R15.06, ANSI B11.19, ISO13849-1/EN ISO13849-1
• Operating temperature	-25°C to +60°C (no freezing) for silicone rubber cap: -10°C to +60°C (no freezing) for NBR/PVC- polyblend rubber cap
• Storage temperature	45 to 85 % RH (no condensation)
• Relative humidity	-40°C to +80°C (no freezing)
• Pollution degree	3 (2 inside housing)
• Rated Voltage	250 V 30 V (with pilot light)
• Operating current I_{TH}	3 A (Emergency-Stop-Button 5.0 A)
• Dielectric strength U_{imp}	2,5 kV (push button, 1,5 kV key switch)
• Protection degree	Class II (IEC61140), Class III (with pilot light)
• Operating frequency	1.200 operations/hour
• Vibration resistance Operation	150 m/s²
Destruction	1.000 m/s²
• Shock resistance Operation	5 to 55 Hz, Amplitude 0,5 mm min.
Destruction	16,7 Hz, Amplitude 1,5 mm min.
• Free fall	1,0 m 1 fall (Based on IEC60068-2-32)
• Protection degree	IP66, 67 without optional switch and pilot light, IP65 with optional switch and / or pilot light
• Conditional short-circuit current	50 A (250 V)
• Rec. short circuit protection	250 V, 10 A fast acting type fuse
• Direct opening force	60 N min. (monitor switch), 4,7mm min. (Position 3)
• Rec. short circuit protection	500 N min.
• Weight	140 g - 170 g depends on version
• Pilot ligth	Rated operational voltage: 24 V DC, ± 10% Connecting the indicator light at SELV – (Safety Extra Low Voltage) or PELV (Protective Extra Low Voltage) circuits *. 1 Rated current: 15mA Light Source: LED Lighting colour: green, red, yellow, amber, white.

Electrical Specifications

• Rated voltage	250 V AC / DC		
• Operating current	3,0 A (Emergency -Stop Button 5,0 A)		
• Rated data	30 V	125 V	250 V
Working contacs			
• Resistive load (AC 12)	—	1,0 A	0,5 A
• Inductive load (AC 15)	—	0,7 A	0,5 A
• Resistive load (DC 12)	1,0 A	0,2 A	—
• Inductive load (DC 13)	0,7 A	0,1 A	—
• Contact configuration			
Auxiliary contacts			
• Resistive load (AC 12)	—	2,0 A	1,0 A
• Inductive load (AC 15)	—	1,0 A	0,5 A
• Resistive load (DC 12)	2,0 A	0,4 A	0,2 A
• Inductive load (DC 13)	1,0 A	0,22 A	0,1 A
• Contact configuration			
Emergency-Stop Button			
• Resistive load (AC 12)	—	5,0 A	3,0 A
• Inductive load (AC 15)	—	3,0 A	0,5 A
• Resistive load (DC 12)	2,0 A	0,4 A	0,1 A
• Inductive load (DC 13)	1,0 A	0,22 A	0,1 A
• Contact configuration			
Push button			
• Resistive load (AC 12)	—	0,5 A	—
• Inductive load (AC 15)	—	0,3 A	—
• Resistive load (DC 12) 1,0 A	0,2 A	—	
• Inductive load (DC 13)	0,7 A	0,1 A	—
• Contact configuration	1 or 2 opener		

Min. Load: 3 V AC / DC and 5 mA (reference value).

Terminal Arrangement (bottom view)

Keylock

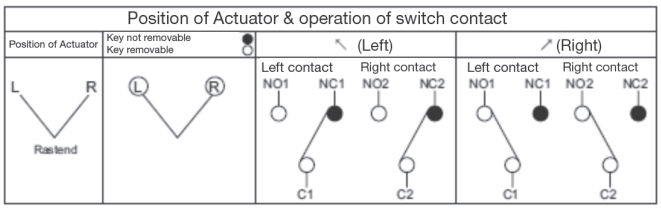

Wire length in 3positions handgrip-enabling switch

	3 positions Handgrip - Enabling Switch								Push Button Keylock			Emergen-cy-Stop Button		Signal Lamp	
	NO1	C1	11	12	31	32	NO2	C2	C	NO	NC	1	2	+	–
Core length L1 (mm)	40	45	50	60	50	60	85	80	120			110		115	
Isolating length L2 (mm)	L2 = 5 mm														

Ordering Information

Contact Configuration		Additional Control Devices				Rubber Cap	Serial Number
Working contacts	Auxiliary contacts	Emergency Stop	Control Device A	Control Device B	Signal Lamp		
2 contacts	Yes (1NC)	without				yellow /silicone	ZB2Y1-01
						grey /NBR/PVC	ZB2G1-01
		Yes (2NC)	without		without	yellow /silicone	ZB2Y1-03
					Yes	yellow /silicone	ZB2Y1-04
		Yes (2NC)	push button	push button	no	yellow /silicone	ZB2Y1-06
		no				yellow /silicone	ZB2Y1-05
		Yes (2NC)		key switch		yellow /silicone	ZB2Y1-08

Operating Characteristics

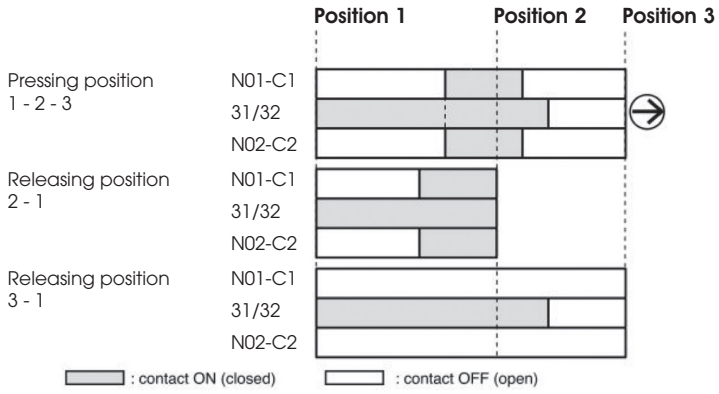

- Reference values without the rubber cap , the measured values for pressing the center of the probe.
- Operating force depending on temperature with rubber cap
- Actuating force for actuating Level 2 - Level 3 can be changed

Connection Example (Safety Category 4)

Core lengths in 3-stage Enabling Switch Handgrip

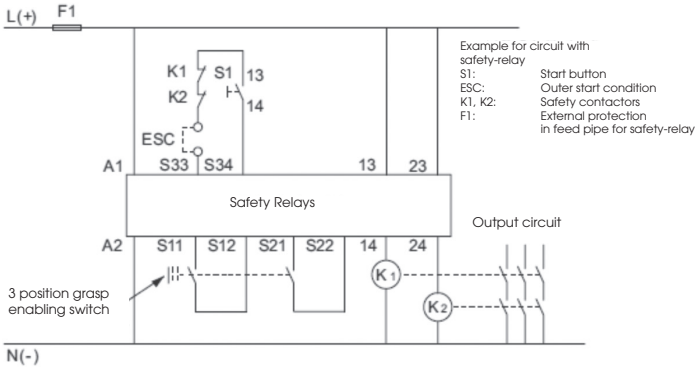

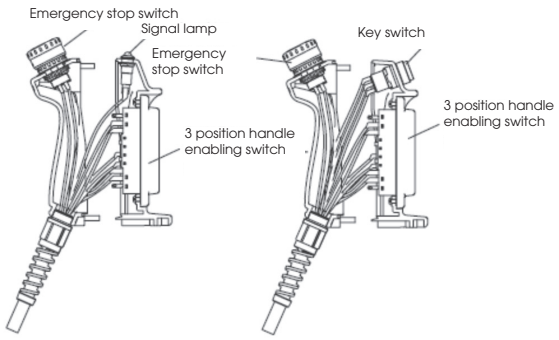

Dimensions (all dimensions in mm)

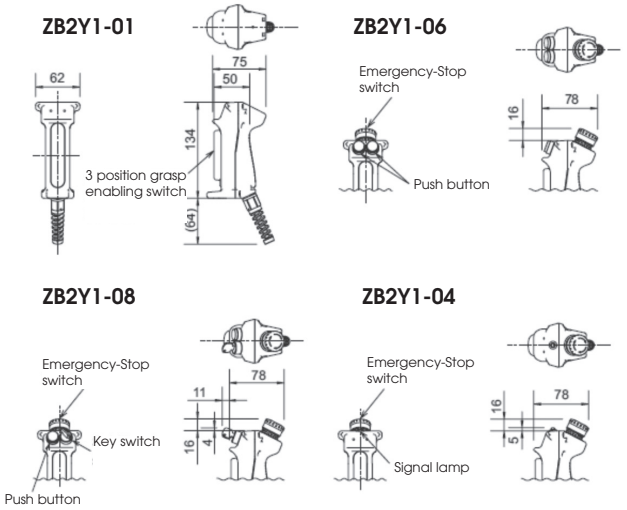

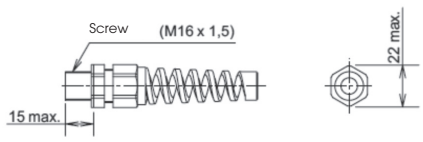

B-COMMAND GMBH
Gruetzmuehlenweg 46 • DE-22339 Hamburg
Fon: +49(0)40/53 80 92 50 • Fax: +49(0)40/53 80 92 85
e-mail: info@b-command.com • www.b-command.com